200383
DCC 30 M 40 NSK-IBSL
Inductive proximity sensor

- Metal connector
- Integrated amplifier
- Short-circuit protection
- Starting pulse suppression
- LED

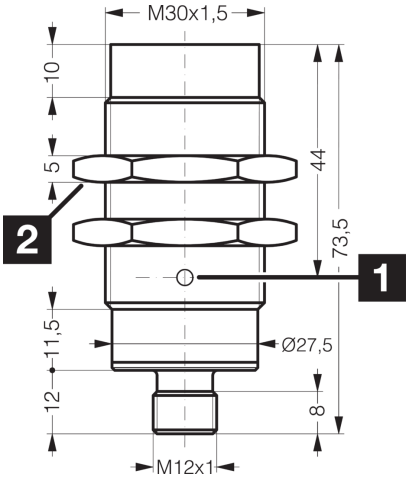

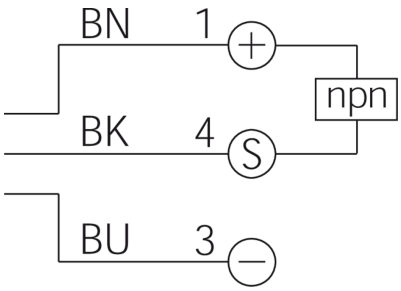

1) LED 2) Width over flats 36 mm BK: black BN: brown BU: blue

Function

Technical data (typ.)	+20°C, 24 V DC
Service voltage	10 … 30 V DC
Internal power consumption	< 10 mA
Insulation voltage endurance	According to IEC 60947-5-2 (7.2.3.1)
Installation type	non-flush
Thread	M30 x 1.5
Housing length	73.5 mm
Housing material	Brass (chromium-plated)
Protection class	III, operation on protective low voltage
Operating principle	inductive
Evaluation	digital
Design	Thread
Characteristics	extremely high operating distance
Product series	INC-400 Large operating distance
Switching output	npn, 200 mA, NO
Voltage drop (max.)	2 V (200 mA)
Switching distance (SN)	40 mm
Standardized measuring plate	120 x 120 x 1 mm
Switching hysteresis (max.)	< 3 … < 15 %
Switching frequency	65 Hz
Ambient temperature during operation	-25 … +70 °C

© di-soric . Right to change reserved . 18.11.2024 . Page 1

di-soric GmbH & Co. KG . Steinbeisstraße 6 . DE-73660 Urbach . www.di-soric.com

200383
DCC 30 M 40 NSK-IBSL
Inductive proximity sensor

Technical data (typ.)	+20°C, 24 V DC
Protection type	IP 67
Connection	Connector, M12, 4-pin, A-coded
Connection cable	VK …

More information / accessories	https://www.di-soric.com/200383

© di-soric . Right to change reserved . 18.11.2024 . Page 2 (2)