205332
DCR 40 K 04 NOK-TSL
Inductive proximity sensor

- Metal connector
- Integrated amplifier
- Short-circuit protection
- Starting pulse suppression
- LED

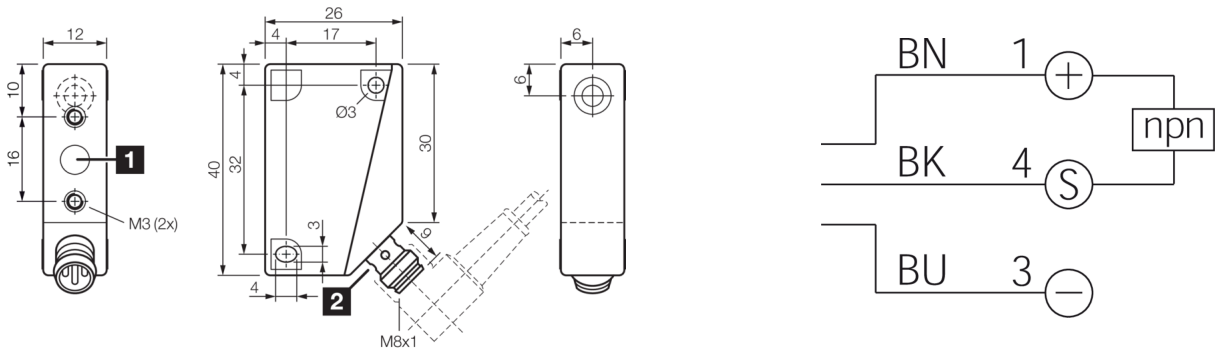

1) LED 2) LED 4 x 90° (yellow) BK: black BN: brown BU: blue

Function

Technical data (typ.)	+20°C, 24 V DC
Service voltage	10 … 35 V DC
Internal power consumption	< 10 mA
Insulation voltage endurance	500 V
Installation type	non-flush
Housing dimensions	40 x 12 mm
Housing length	26 mm
Housing height	40 mm
Housing width	12 mm
Housing material	Plastic
Protection class	III, operation on protective low voltage
Operating principle	inductive
Evaluation	digital
Design	Cuboid design
Product series	INE Extended
Switching output	npn, 200 mA, NC
Voltage drop (max.)	2.4 V
Switching distance (SN)	4 mm
Standardized measuring plate	12 x 12 x 1 mm
Switching hysteresis (max.)	< 15 %
LED Anzeige	Yes
Switching frequency	800 Hz
Ambient temperature during operation	-25 … +70 °C
Protection type	IP 67
Connection	Connector, M8, 3-pin, A-coded

© di-soric . Right to change reserved . 16.07.2024 . Page 1

205332
DCR 40 K 04 NOK-TSL
Inductive proximity sensor

Technical data (typ.)	+20°C, 24 V DC
Connection cable	TK …

More information / accessories	https://www.di-soric.com/205332

© di-soric . Right to change reserved