213366
VSHM-Z-0.2/4/VKM-Z/12-A-CS60
Connection cable

- Shielded
- Connection cable: Connector / coupling
- Sturdy metal union nut
- High protection type

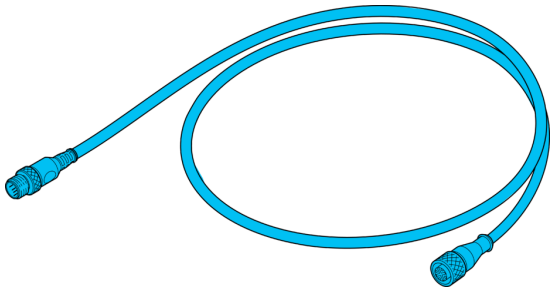

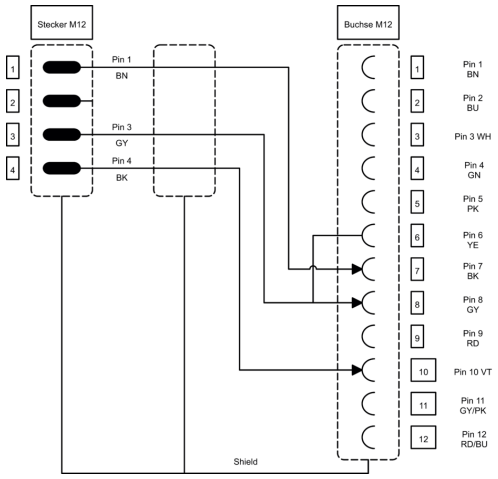

Function

Technical data (typ.)	+20°C
Service voltage	30 V DC
Length	200 mm
Protection class	III, operation on protective low voltage
Component	Connection cable
Design	Straight / straight
To be used for	CS 60 Vision Sensors
Ambient temperature during operation	-25 … +85 °C
Protection type	IP 67 (at tightening torque 0.6 Nm)
Connection	Socket, M12 x 1, 12-pin
Connection 2	Connector, M12, 4-pin
Cross-section	0.14 x 0.14 mm (12 x)

More information / accessories	https://www.di-soric.com/213366

© di-soric . Right to change reserved . 18.11.2024 . Page 1 (1)