200378
DCC 30 M 22 PSK-IBSL
Inductive proximity sensor

- Metal connector
- Integrated amplifier
- Short-circuit protection
- Starting pulse suppression
- LED

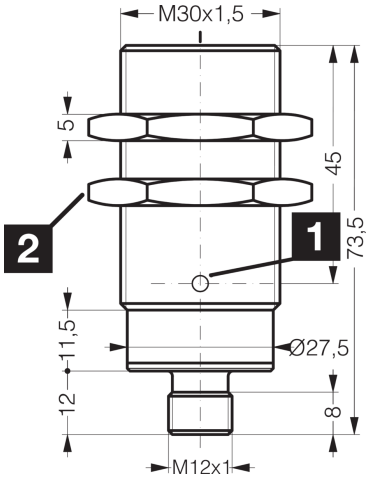

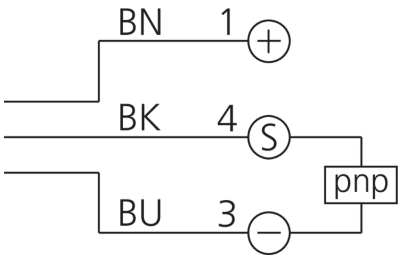

1) LED 2) Width over flats 36 mm BK: black BN: brown BU: blue

Function

Technical data (typ.)	+20°C, 24 V DC
Service voltage	10 … 30 V DC
Internal power consumption	< 10 mA
Insulation voltage endurance	500 V
Installation type	quasi-flush
Thread	M30 x 1.5
Housing length	73.5 mm
Housing material	Brass (chromium-plated)
Protection class	III, operation on protective low voltage
Operating principle	inductive
Evaluation	digital
Design	Thread
Characteristics	extremely high operating distance
Product series	INE Extended
Switching output	pnp, 200 mA, NO
Voltage drop (max.)	2 V (200 mA)
Switching distance (SN)	22 mm
Standardized measuring plate	66 x 66 x 1 mm
Switching hysteresis (max.)	3 … 15 %
Switching frequency	200 Hz
Ambient temperature during operation	-25 … +70 °C

200378
DCC 30 M 22 PSK-IBSL
Inductive proximity sensor

Technical data (typ.)	+20°C, 24 V DC
Protection type	IP 67
Connection	Connector, M12, 4-pin, A-coded
Connection cable	VK …

More information / accessories	https://www.di-soric.com/200378

© di-soric . Right to change reserved