201571
OTZ 510
Sensor probe

- Small probe made of stainless steel
- Detecting metal and non-metal parts
- No lateral sensitivity, mountable at or on metal plates

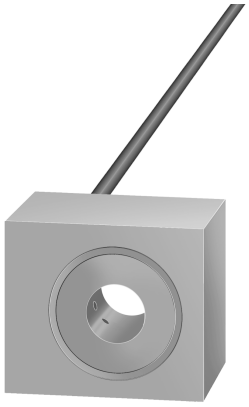

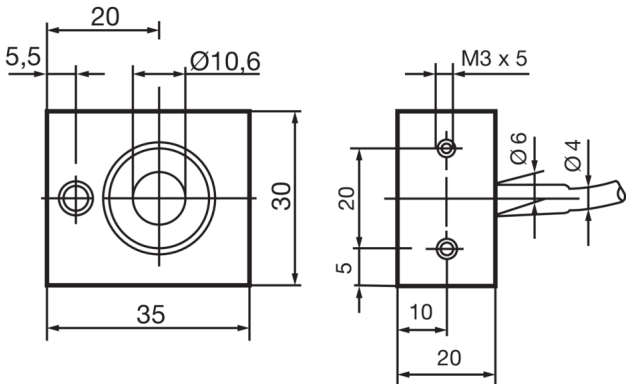

Function

Technical data (typ.)	+20°C, 24 V DC
Insulation voltage endurance	500 V
Internal diameter	10.6 mm
Housing material	Aluminum (Black, Anodized)
Design	Cuboid design
Resolution	Ø 1.0 mm ((In center))
Shock/vibration load	30 g, 11 ms / 10 … 55 Hz, 1.0 mm
Ambient temperature during operation	0 … +50 °C
Protection type	IP 63
Connection	Pigtail, 0.5 m

More information / accessories	https://www.di-soric.com/201571

© di-soric . Right to change reserved . 16.07.2024 . Page 1 (1)