206378
LI 144-12.5-1788-1840 I
Light grids

- With evaluation electronics LVE ... / LVX ... measuring and switching
- With evaluation electronics LVB ... switching
- Beam evaluation horizontal or diagonal
- Compact design
- Aluminum housing
- Easy to install

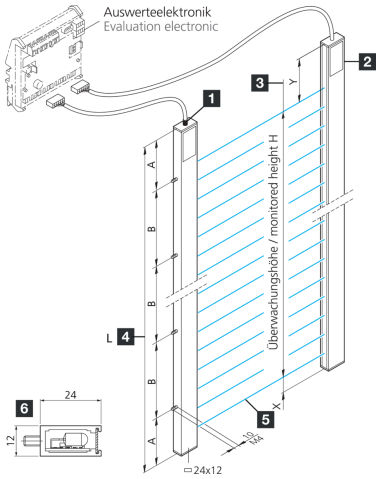

Zum Betrieb mit Auswerteelektronik LVE ... / LVX ... / LVB ...
To be used with evaluation electronics LVE ... / LVX ... / LVB ...

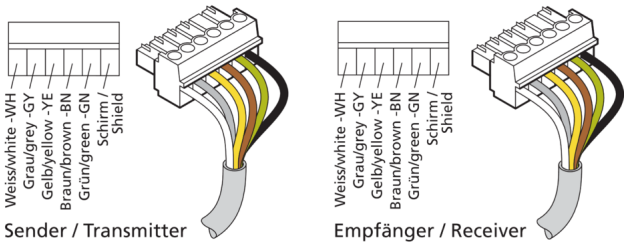

1) Transmitter
2) Receiver
3) Monitoring height H
4) Profile length L
5) Evaluation electronics
6) Profile cross section

BN: brown
GN: green
GY: grey
WH: white
YE: yellow

Function

Technical data (typ.)	+20°C, 24 V DC
Service voltage	20 … 26 V DC (see evaluation electronics)
Assembly	Threaded bolt (4)
Profile cross section	12 x 24 mm
Dimension	■ A: 170 mm ■ B: 500 mm ■ X: 13.5 mm ■ Y: 38.5 mm
Profile length	1840 mm
Housing material	Aluminum (natural)
Protection class	III, operation on protective low voltage
Evaluation	absolute, percentage, Configurable via evaluation electronics
Evaluation electronics	external
Output function	Configurable via evaluation electronics
Switching output	Configurable via evaluation electronics, NO, NC
Light source	LED
Color	Infrared
Wavelength	880 nm
Beam evaluation	via external evaluation electronics
Beam separation	12.5 mm

206378
LI 144-12.5-1788-1840 I
Light grids

Technical data (typ.)	+20°C, 24 V DC
Number of beams	144
Monitoring height	1788 mm
Range	250 … 6000 mm (adjustable via evaluation electronics)
Measuring range	1788 mm
Ambient temperature during operation	-20 … +40 °C
Protection type	IP 54 (IP 65 optional)
Connection	Cable, 4.0 m (with plug connector, additional variants on request)

More information / accessories	https://www.di-soric.com/206378

© di-soric . Right to change reserved . 18.11.2024 . Page 2 (2)