208253
HS-K-15-12-A
Cross connector

- Highly flexible versatile mounting system
- Universal mounting
- Stepless adjustment
- Robust design

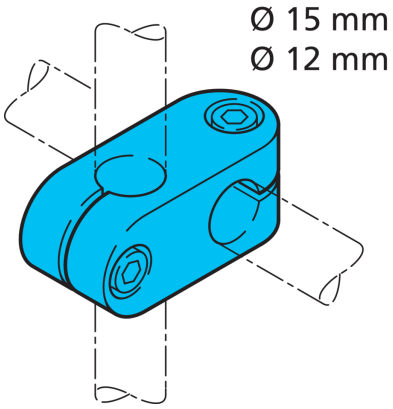

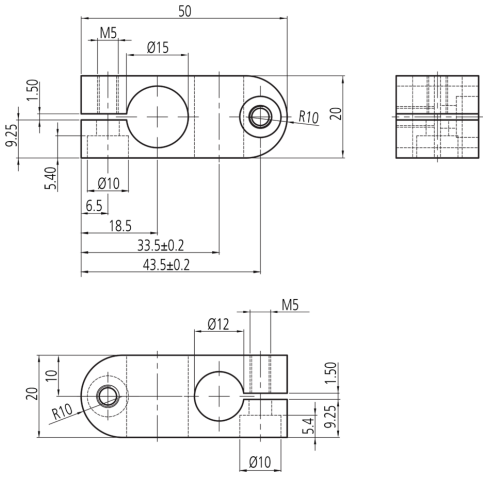

Technical data (typ.)	+20°C
Dimension	Ø 15 / Ø 12 mm (Diameter Mounting pin / boring)
Housing material	Aluminum
Component	Cross connector
Product series	Z-UBT-KL-MS Assembly system

More information / accessories	https://www.di-soric.com/208253

© di-soric . Right to change reserved . 08.06.2023 . Page 1 (1)